cameo® for lumen beings

Photometric Measurements

Photometrische Messungen I Mesures Photométriques
Medicones Fotométricas

PIXBAR® SMD IP G2 (CLPBSMDIPG2)

	Luminous flux	Chromaticity coordinates	CCT	R_a
Full on	8051 lm	x 0.283 y 0.270	6700	86
Red	998 lm	x 0.694 y 0.304	-	-
Green	1658 lm	x 0.146 y 0.705	-	-
Blue	311 lm	x 0.150 y 0.033	-	-
White	3729 lm	x 0.311 y 0.320	-	-

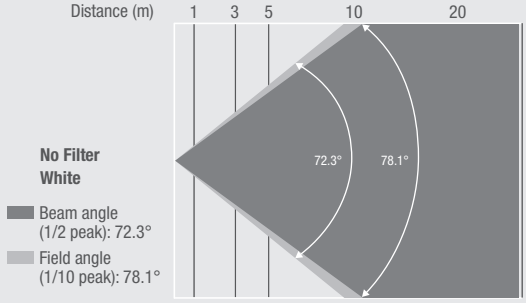

No Filter
White

Beam angle (1/2 peak): 72.3°
Field angle (1/10 peak): 78.1°

Illuminance (full on) [lux]	11.7k	1.3k	470	117	29
Beam width (1/2 peak) [cm]	146	438	731	1461	2922
Beam width (1/10 peak) [cm]	162	487	811	1622	3245

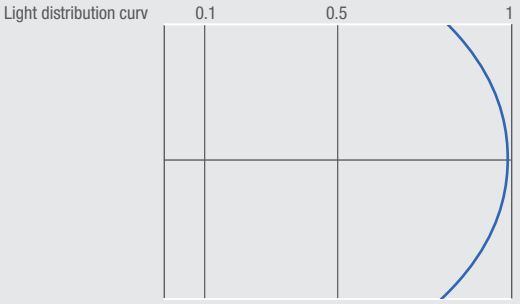

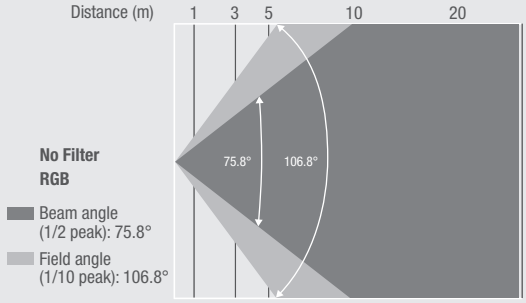

No Filter
RGB

Beam angle (1/2 peak): 75.8°
Field angle (1/10 peak): 106.8°

Illuminance (full on) [lux]	8k	896	323	81	20
Beam width (1/2 peak) [cm]	156	467	778	1557	3114
Beam width (1/10 peak) [cm]	269	808	1347	2693	5386

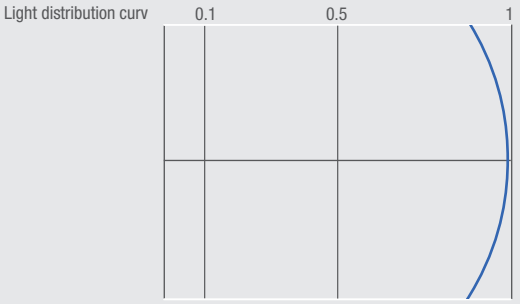

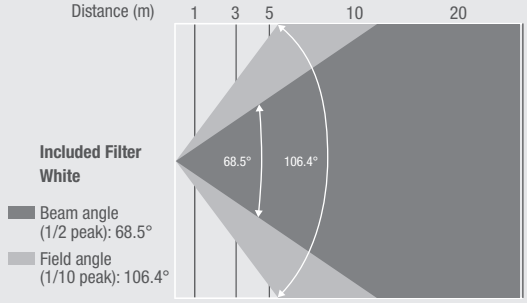

Included Filter
White

Beam angle (1/2 peak): 68.5°
Field angle (1/10 peak): 106.4°

Illuminance (full on) [lux]	8.5k	949	342	85	21
Beam width (1/2 peak) [cm]	136	409	681	1362	2724
Beam width (1/10 peak) [cm]	267	802	1337	2673	5347

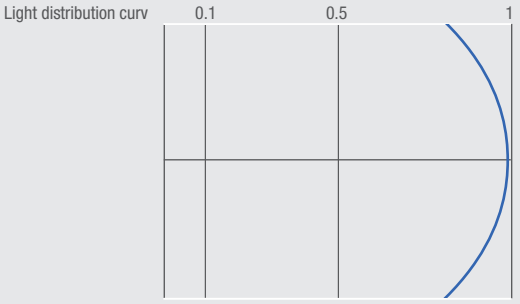

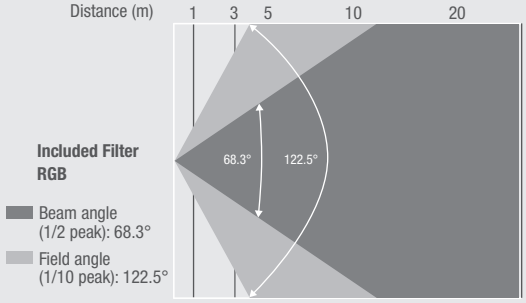

Included Filter
RGB

Beam angle (1/2 peak): 68.3°
Field angle (1/10 peak): 122.5°

Illuminance (full on) [lux]	5.9k	659	237	59	15
Beam width (1/2 peak) [cm]	136	407	678	1357	2713
Beam width (1/10 peak) [cm]	365	1094	1823	3646	7291

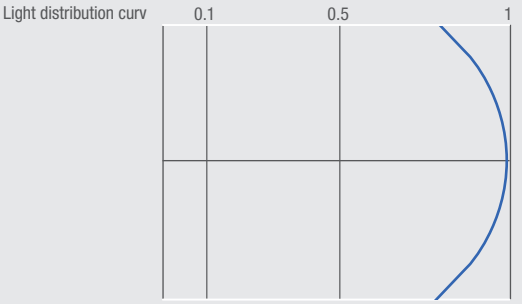

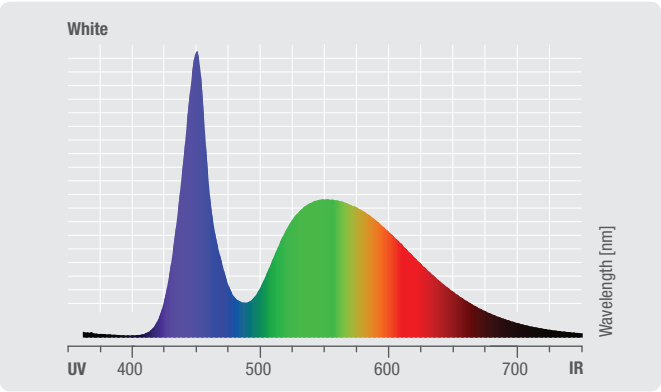
White
UV
400
500
600
700
IR
Wavelength [nm]

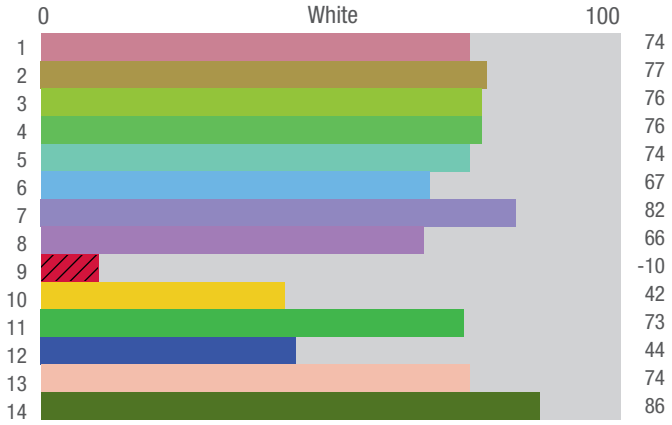
0
White
100
1 74
2 77
3 76
4 76
5 74
6 67
7 82
8 66
9 -10
10 42
11 73
12 44
13 74
14 86

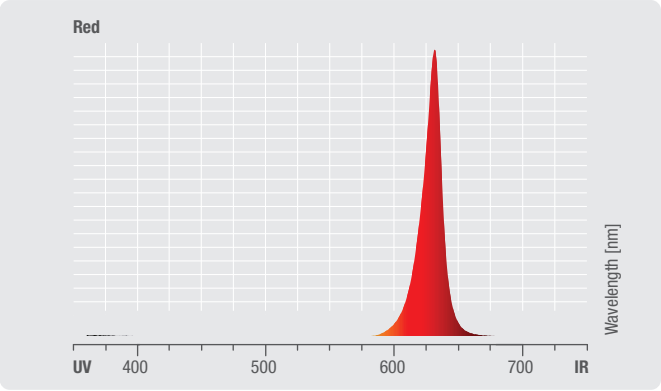
Red
UV
400
500
600
700
IR
Wavelength [nm]

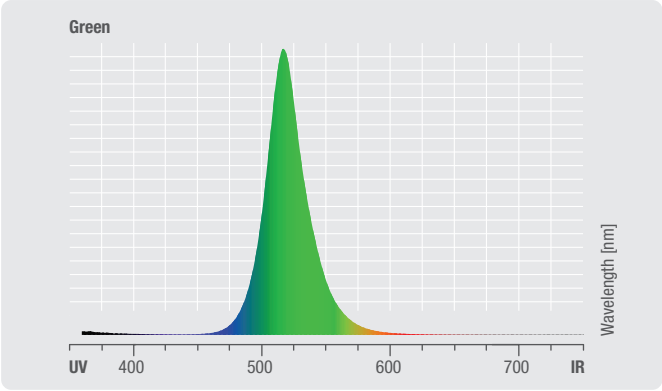
Green
UV
400
500
600
700
IR
Wavelength [nm]

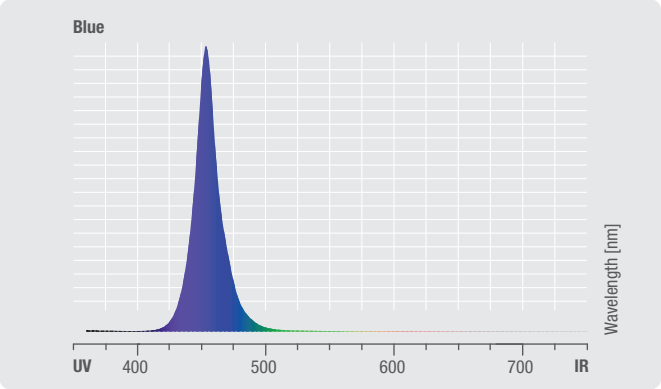
Blue
UV
400
500
600
700
IR
Wavelength [nm]